Proc. SPIE, Vol.7846 (2010) 784618-1 ~ 784618-6 [6 pages]

Double-resonance optical-pumping spectra of rubidium $5S_{1/2}$ - $5P_{3/2}$ - $4D_{3/2}$ transitions and frequency stabilization of 1.5-micrometer laser

Jing Gao, Jie Wang, Baodong Yang, Tiancai Zhang, and Junmin Wang *

State Key Laboratory of Quantum Optics and Quantum Optics Devices,

and Institute of Opto-Electronics, Shanxi University,

No. 92 Wucheng Road, Taiyuan 030006, Shanxi Province, P. R. China

ABSTRACT

We demonstrate the spectra of ^{87}Rb $5S_{1/2}$ - $5P_{3/2}$ - $4D_{3/2}$ transitions by utilizing the double-resonance optical-pumping (DROP) and optical-optical double-resonance (OODR) techniques, respectively. The DROP spectrum, compared with the traditional OODR spectrum, show a much better signal-to-noise ratio (SNR). Paying special attention to the influence of alignment of lasers where the coupling and probe beams are counter-propagation and co-propagation on DROP spectrum, so as to further narrow the spectral width by means of electromagnetically induced transparency (EIT). When -the frequency of 1.5μm fiber-pigtailed butterfly-type distributed-feedback (DFB) diode laser is stabilized to the DROP spectrum of ^{87}Rb $5P_{3/2}$ - $4D_{3/2}$ transition, the preliminary result of residual frequency jitter after stabilization is ~ ±1.3 MHz within 60 s.

Keywords: Excited states spectrum, Double-resonance optical pumping (DROP), Electromagnetically induced transparency (EIT), Ladder-type atomic system, Frequency stabilization

1. INTRODUCTION

Doppler-free laser spectroscopy for the transitions between atomic excited states plays an important role in a variety of fields, including high-resolution spectroscopy, frequency standards, multi-photon laser cooling and trapping of atoms and so on. Among these applications, $5S_{1/2}$ - $5P_{3/2}$ - $4D_{3/2}$ transitions, a three-level ladder-type system, have attracted considerable attentions for several reasons. Firstly, the $5P_{3/2}$ - $4D_{3/2}$ transition with a wavelength of 1529 nm as a frequency reference in Wavelength Division Multiplexing (WDM) and Dense Wavelength Division Multiplexing (DWDM) systems of optical telecommunication is used to calibrate the frequency of the dense telecommunication channels. Secondly, the $5S_{1/2}$, (F=2)-$5P_{3/2}$, (F′=3) cycling transition with a wavelength of 780 nm is employed to store the quantum states of photons, while the wavelength of 1529 nm is naturally suited for distributing quantum states of photons over long distance due to low-loss in optical telecommunication fiber. In 2006, via similar ladder system, Chaneliere *et al* generated entanglement of 780 nm and 1529 nm photons using an ensemble of ultra-cold rubidium atom. This two-color entanglement has potential applications in future quantum information networks [1].

The optical-optical double-resonance (OODR) method as a sophisticated technique has been widely utilized to approach a spectrum for transitions between atomic excited states [2, 3]. However, the signal-to-noise ratio (SNR) of OODR spectrum is inadequate in a atomic system with large spontaneous emission rates. Many atoms, including all alkali atoms, belong to this kind system. Recently, a novel optical pumping spectroscopic technique, double-resonance optical-pumping (DROP) spectrum, can remarkably improve the SNR of the spectrum between atomic excited states [4]. The main idea of DROP is to monitor the population of the atomic ground state instead of the excited state.

We investigated and compared the spectrum for ^{87}Rb $5P_{3/2}$ - $4D_{3/2}$ transition via OODR and DROP techniques. Meanwhile, we discussed the influence of the alignment of coupling and probe laser beams (co-propagating and counter-propagating configurations) on the properties of DROP spectrum. Thanks to DROP and the two-photon atomic coherence in the counter-propagating configuration with a ladder-type atomic system, high-SNR and narrow line-width

*** Corresponding author, Email: wwjjmm@sxu.edu.cn, Fax: +86 - 351 - 7011500, Tel: +86 - 351 – 7011844***

Quantum and Nonlinear Optics, edited by Qihuang Gong, Guang-Can Guo, Yuen-Ron Shen,
Proc. of SPIE Vol. 7846, 784618 · © 2010 SPIE · CCC code: 0277-786X/10/$18 · doi: 10.1117/12.871685

DROP spectrum of ^{87}Rb $5P_{3/2}$ - $4D_{3/2}$ transition is achieved with a room-temperature atomic vapor cell. Employing thehigh-SNR and narrow line-width ^{87}Rb DROP spectrum as frequency reference, we preliminarily stabilized the frequency of 1529 nm fiber-pigtailed butterfly-type distributed-feedback (DFB) diode laser.

2. EXPERIMENT SETUP

Figure 1 shows the relevant energy levels of ^{87}Rb atom. The center wavelength for $5S_{1/2}$ - $5P_{3/2}$ transition and $5P_{3/2}$ - $4D_{3/2}$ transition are 780.2 nm and 1529.3 nm, respectively. The natural linewidth of $5P_{3/2}$ - $5S_{1/2}$ spontaneous emission is $\Gamma_2/2\pi$ = 6 MHz, and that of $4D_{3/2}$ - $5P_{3/2}$ is spontaneous emission is $\Gamma_3/2\pi$ = 2 MHz.

Figure 2 shows the experiment scheme for DROP and OODR spectra. Utilizing modulation-free polarization spectroscopy, the 780nm extended-cavity diode laser (D_{L1}) is locking to the $5S_{1/2}$, (F=2)-$5P_{3/2}$, (F′=3) cycling transition. The residual frequency fluctuation of D_{L1} was about ~ ±300 kHz after locked in 300s. The 1529nm fiber-pigtailed butterfly-type DFB diode laser (D_{L2}) is scanned over the entire range of excited states of the $5P_{3/2}$-$4D_{3/2}$ transition. The two coherent laser beams are orthogonally polarized and co-propagate through an aperture with 1-mm diameter and 5-mm-long rubidium vapor cell. They overlapped and separated by two dielectric coated filters (DCF). The laser power is controlled with a half-wave plate (HWP) and a polarization beam splitter (PBS) cube. The photodiode 1 (PD1) was detected a transmission of the laser of D_{L1} to obtain DROP signal, while the photodiode 2 (PD2) was detected the laser of D_{L2} to obtain OODR signal. To reduce the affection of the stray magnetic fields, rubidium vapor cell is wrapped with the μ-metal shield material.

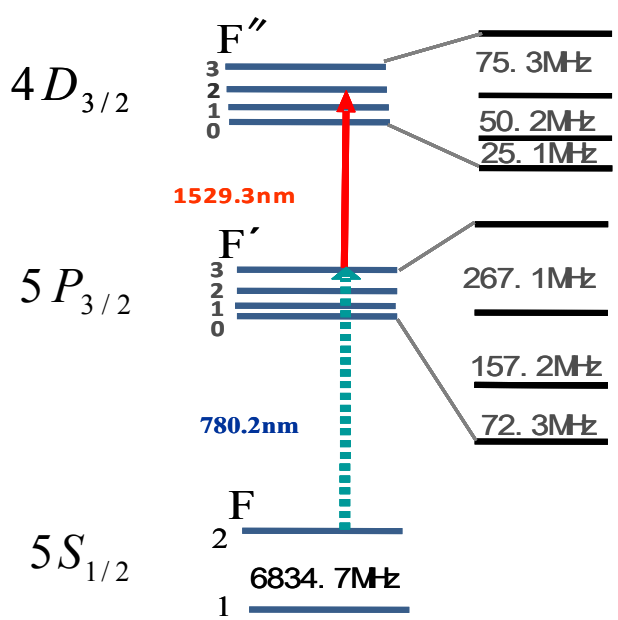

Fig.1 Relevant energy levels of the $5S_{1/2}$-$5P_{3/2}$-$4D_{3/2}$ transitions of ^{87}Rb atoms.

3. EXPERIMENT RESULTS

3.1 OODR and DROP spectra

As seen above, we can simultaneously obtain the OODR and DROP spectra in the same experimental configuration. Figure 3 shows the comparison of DROP and OODR spectra of the ^{87}Rb $5P_{3/2}$ - $4D_{3/2}$ transition. The transmitted signal at

780nm detected by PD1 is the DROP spectrum, while the transmitted signal at 1529nm detected by PD2 is the OODR spectrum. Under the same condition, where the powers of D_{L1} and D_{L2} are 24 μw and 20 μw each, there are two differences between DROP and OODP spectra. The first one is the base line. When 1529nm D_{L2} is scanned over the excite state via applying a proper triangle-wave into current modulation port, the base line of OODR spectrum is not so flat as DROP spectrum due to the residual amplitude modulation. Another difference is that the SNR of DROP is much better than that of OODR.

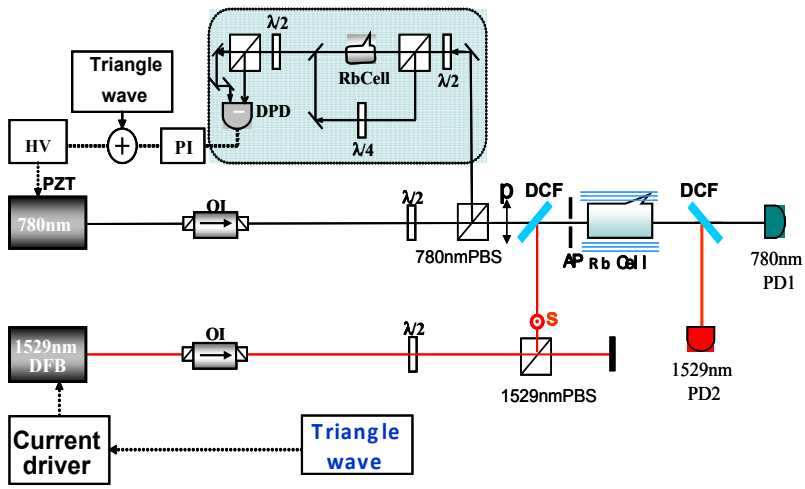

Fig. 2 Experiment scheme for DROP and OODR spectrum of the transition $5P_{3/2}$-$4D_{3/2}$ of ^{87}Rb atoms. DFB: fiber-pigtailed butterfly-type distributed-feedback diode laser; OI: optical isolator; DCF: dielectric-coated filter; AP: aperture; PBS: polarization beam splitter cube; λ/2: half-wave plate; HV: high voltage amplifier; PZT: piezoelectric transducer; PI: proportion-integration amplifier; DPD: differential photodiode; PD, photodiode.

Both DROP and OODR spectra based on the interaction of atoms with two optical fields that are resonant to two transitions which share a common state, but the two kinds of spectra show different SNR due to different causes of formation. The OODR can be interpreted a single-photon transition, while the DROP can be accounted for two-photon transition and optical pumping. As is shown in Fig 2, D_{L1} is locked to ^{87}Rb D_2 line and D_{L2} is scanned over the $5P_{3/2}$ (F′=3) - $4D_{3/2}$ (F″=2, F″=3) transition. When both two lasers are resonant with relevant transitions, partial atoms in the $5S_{1/2}$ (F=2) ground state are excited to the $4D_{3/2}$ state via two steps excitation, then many atoms in excited states can be spontaneously decay to the $5S_{1/2}$ (F=1) ground state through different intermediate states, such as $5P_{3/2}$ (F′=1 or 2) state. The reason why high SNR of DROP spectrum is that the population of the $5S_{1/2}$ (F=2) ground state quickly decreases due to being optically pumped into another ground state. However, the OODR is concerned with the population of $5P_{3/2}$ (F′=3) intermediate state. Based on the low thermal equilibrium population in excited state, the SNR of OODR signal is lower than that of DROP signal. In addition, another reason is that the power of 780nm D_{L1} is low to keep the spectral width from power broadening.

3.2 Effect of alignment

Recently, people have interested in researching the effect of EIT on optical pumping. However, this effect mostly focuses on Λ type atomic system where atomic coherence is induced between two ground states [5]. Actually, there also exists EIT effect in a three-level ladder-type system where atomic coherence is induced between the ground state and the upper excited state. In the follow-up experiment, atomic coherence effect (EIT) is employed to narrow spectral width of DROP in the ^{87}Rb $5S_{1/2}$-$5P_{3/2}$-$4D_{3/2}$ ladder-type system.

Figure4 shows the experiment arrangement for investigating the influence of alignment of lasers on a DROP. Compare with the figure2, this scheme add a HWP and a PBS with wavelength of 1529nm. We can align the two laser beams as either counter-propagation or co-propagation in this setup. When blocking beam 2, beam 1 as the coupling beam co-propagate with 780nm probe beam through the vapor cell. When blocking beam 1, beam 2 as the coupling beam counter-propagate with 780nm probe beam along the vapor cell. To avoid other factors influencing line-width, such as power, beam 1 and beam 2 have same polarization and power which controlled with a HWP and PBS.

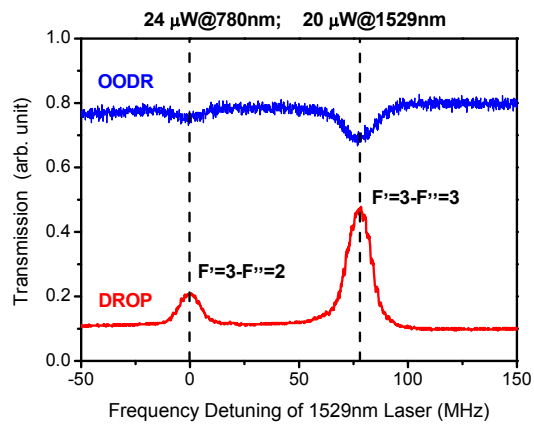

Fig. 3 Comparison of a DROP with OODR spectrum of ^{87}Rb $5P_{3/2}$-$4D_{3/2}$ transition. The SNR of DROP is approximate ten times higher than that of OODR.

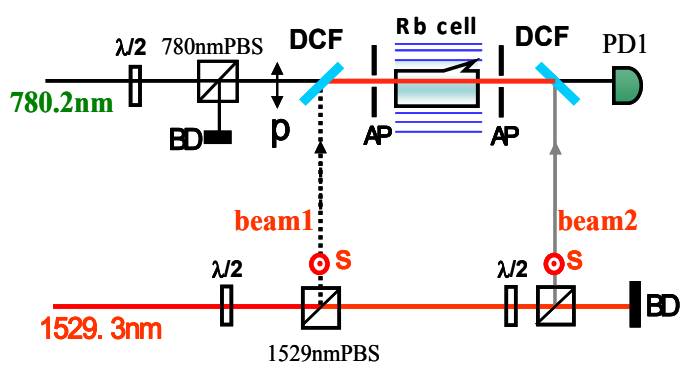

Fig. 4 The adjustable alignment of coupling and probe laser beams (co-propagating (CP) and counter-propagating (CTP) configurations). Dashed line with arrow: coupling beam propagates in the direction of beam 1 for CP; Gray solid line with arrow: coupling beam propagates in the direction of beam 2 for CTP.

Figure5 shows the change in spectral width of DROP where coupling and probe laser beams co-propagate and counter-propagate along the Rb vapor cell. The line-width for co-propagation is ~ 8.8 MHz and for counter-propagation is ~ 14.5 MHz. In a three-level ladder-type system, there are simultaneously existed optical pumping and EIT effect which associated with atomic coherence between the ground state and the upper excited state. In some ladder-type EIT experiments, DROP often neglected because weak optical pumping caused by a low power pump. In three-level ladder-type Doppler-broadened medium, Min Xiao et al. demonstrated and proved theoretically that EIT exists in the case of where coupling and probe beams are counter-propagation due to the two-photon Doppler-free arrangement [6].

In the $5S_{1/2}$-$5P_{3/2}$-$4D_{3/2}$ ladder-type system, the Doppler effect cannot be entirely eliminated due to the frequency difference between the 780 nm D_{L1} and 1529 nm D_{L2}, but the EIT effect exists with the optical pumping simultaneously and these effects result in a narrow line-width of DROP in the case of counter-propagation. In 2007, Mohapatra *et al* using EIT to measure the fine structure splitting of highly excited Rydberg state in a ladder system which frequencies of probe and coupling laser are relatively largely different [7].

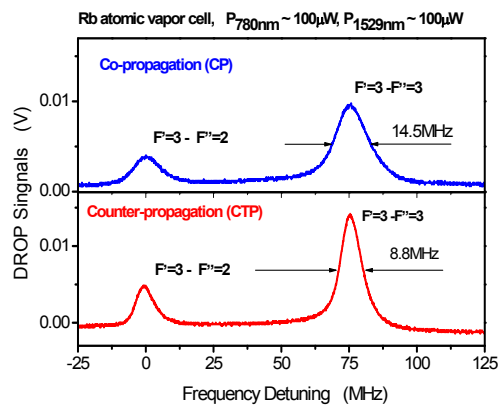

Fig. 5 Influence of the alignment of two lasers beams (CP and CTP configurations) on the line-width of DROP spectra. The spectral width is ~ 14.5 MHz for co-propagating lasers and ~ 8.8MHz for counter-propagating lasers.

3.3 Laser frequency stabilization

It is well-know that the high-resolution spectrum is important for the laser frequency stability. Using the advantages of DROP spectra with high SNR and narrow line-width, the frequency of 1.5 μm DFB laser is stabilized to the ^{87}Rb $5P_{3/2}$ (F′=3)-$4D_{3/2}$ (F″=3) transition.

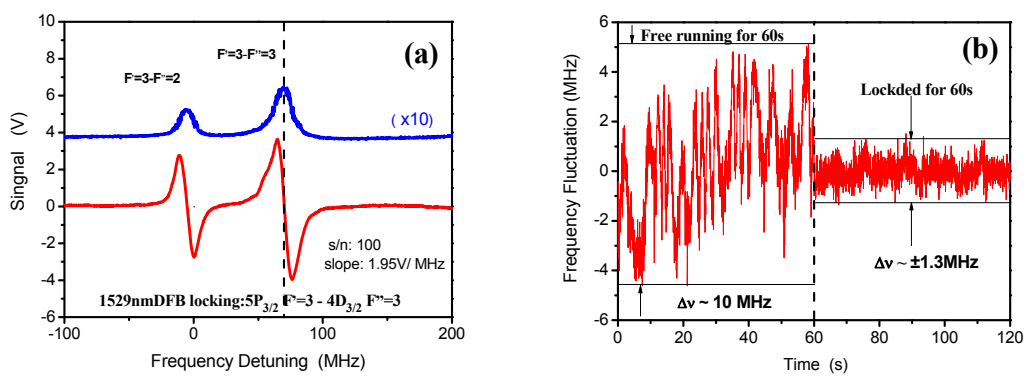

Fig. 6 Frequency stabilization of D_{L2} laser@1529 nm via the DROP spectrum. (a) The DROP of the $5P_{3/2}$ (F′=3) - $4D_{3/2}$ (F″=2, F″=3) transition and the relevant dispersion-like error signal. (b) Frequency fluctuation for D_{L2} laser@1529 nm in the free-running case and after being locked.

In fact, high SNR and narrow line-width cannot be optimized simultaneously. The powers of two lasers are both set to a few mW after a tradeoff. Firstly, the frequency of 780 nm D_{L1} laser is locked to the ^{87}Rb D_2 line by utilizing modulation-free polarization spectroscopy. The error signal which generated from polarization spectroscopy is electrically feed back into the voltage modulation port of PZT of D_{L1} laser. The best value of frequency fluctuation after stabilization is about ± 300 kHz within 300 s. Secondly, the 1529 nm DFB diode laser (D_{L2}) is scanned over the range of

the $5P_{3/2}$ (F′=3)-$4D_{3/2}$ (F″=2, F″=3) transition. As is show in Fig.6 (a), with frequency of 13 kHz, peak-to-peak voltage of 4 mV sine wave modulation for D_{L2}, a dispersion-like error signal of DROP spectrum are obtained by setting the phase sensitive detector of lock-in amplifier. Then the DROP error signal was electrically fed back into the current modulation port of 1529 nm D_{L2} laser. Compared with the free-running case, the frequency stability of 1529 nm D_{L2} laser is improved after locking, as show in Fig. 6 (b). The preliminary result of residual frequency fluctuation after stabilization is ~ ±1.3 MHz within 60 s. The possible reasons of not quite ideal frequency stability are as follows. One potential reason is relevant to the structure of 1529 nm fiber-pigtailed butterfly-type DFB diode laser itself. Its input port of fiber exist optical feedback which lead to mode-hop of the laser along with a change of injection current. Another one is that the noise of home-made feedback system can not be greatly restrained which influent the frequency stability after locking.

4. CONCLUSION

In conclusion, our study focused on the high SNR and narrow spectral width in the spectra between atomic excited states. We demonstrated and analyzed the spectra of ^{87}Rb $5S_{1/2}$-$5P_{3/2}$-$4D_{3/2}$ transitions via OODR and DROP methods experimentally, then observed the change of the line-width with the alignment of coupling and probe laser beam. The line-width of DROP is ~ 8.8 MHz for co-propagating which is narrower than ~ 14.5 MHz for counter-propagating. Thanks to DROP and the two-photon atomic coherence in the counter-propagating configuration with a ladder-type atomic system, higher-resolution DROP spectra of ^{87}Rb $5S_{1/2}$-$5P_{3/2}$-$4D_{3/2}$ transitions are achieved with a room-temperature atomic vapor cell. Employing this spectrum as frequency reference, the frequency of 1529 nm fiber-pigtailed butterfly-type DFB diode laser is preliminarily stabilized, the result of residual frequency fluctuation after stabilization is ~ ± 1.3 MHz within 60 s.

ACKNOWLEDGEMENT

This work is partially supported by the National Natural Science Foundation of China (Grant Nos. 61078051, 60978017, 10974125, and 60821004), the NCET Program from Education Ministry of China (Grant Nos.NCET-07-0524), and the Specialized Research Fund for the Doctoral Program of China (Grant Nos. 20070108003).

REFERENCES

[1] T. Chaneliere, D. N. Matsukevich, S. D. Jenkins, T. A. B. Kennedy, M. S. Chapman, and A. Kuzmich, "Quantum telecommunication based on atomic cascade tranditions", **Phys. Rev. Lett.** 96, 093604 (2003).

[2] R. Boucher, M. Breton, N. Cyr, and M. Tetu, "Dither-free absolute frequency locking of a 1.3 μm DFB laser on ^{87}Rb", **IEEE Photon. Technol. Lett.** 4, 327 (1992).

[3] T. T. Grove, V. Sanchez-Villicana, B. C. Duncan, S. Maleki, and P. L. Gould, "Two-photon two-color diode laser spectroscopy of the Rb $5D_{3/2}$ state", **Physica Scripta** 52, 271 (1995).

[4] H. S. Moon, W. K. Lee, L. Lee, and J. B. Kim, "Double resonance optical pumping spectrum and its application for frequency stabilization of a laser diode", **Appl. Phys. Lett.** 85, 3965 (2004)

[5] C. Y. Ye and A. S. Zibrov, "Width of the electromagnetically induced transparency resonance in atomic vapor", **Phys. Rev. A.** 65, 023806 (2002).

[6] J. Gea-Banacloche, Y. Q. Li, S.-Z. Jin, and M. Xiao, "Electromagnetically induced transparency in ladder-type inhomogeneously broadened media: theory and experiment", **Phys. Rev. A.** 51, 576 (1995).

[7] A. K. Mohapatra, T. R. Jackson, C. S. Adams, "Coherent optical detection of highly excited Rydberg states using electromagnetically induced transparency", **Phys. Rev. Lett.** 98, 113003 (2007).