30

Experimental Demonstration of Electromagnetic Induced Transparency and Dispersion Effects in Cs Atom Vapour *

ZHANG Jun-Xiang(张俊香)[1], DONG Rui-Fang(董瑞芳)[1], CHANG Hong(常宏)[1], XIE Chang-De(谢常德)[1], PENG Kun-Chi(彭炘墀)[1], XIAO Min(肖敏)[2]

[1]*The Key Laboratory of Quantum Optics of Ministry of Education and Institute of Opto-Electronics, Shanxi University, Taiyuan 030006*

[2]*Department of Physics, University of Arkansas, Fayetteville, Arkansas 72701, USA*

(Received 9 May 2001)

The effects of the electromagnetically induced transparency and dispersion of a Λ-type three-level atomic system are experimentally measured with a vapour cell of Cs atoms. The steep dispersion at low absorption is observed. Thus a small group velocity for the probe beam is inferred from the measured dispersion curve.

PACS: 42.50.Gy, 42.50.Hz

Recently, the storage of light in atomic media has attracted much interest for its potential applications in quantum information processing.[1] The physical mechanism is the atomic coherence[2] between atomic states established in three-level Lambda-type or ladder-type systems by coupling a strong light field to the transition between the upper state and one of the lower states while the probe light field is tuned to the transitions between two lower states. In a coherence electromagnetically induced transparency (EIT) medium, a weak probe field at the resonant frequency can propagate with less dissipation and a substantially reduced group velocity.[3] Since the light group velocity is very slow in the EIT medium, it can be trapped and stored in the atomic coherence and later be converted back into the light. In addition to the interest in quantum information science, the effects of EIT have been extensively applied in nonlinear optics,[4,5] highly sensitive magnetometers[6] and in reducing the line width of a cavity.[7]

Compared to normal optical materials, the EIT media have some advantages. When the refractive index is increased and the light velocity is reduced, the medium still keeps the optical transparency. The EIT effect with continuous wave (cw) has been carried out in different atomic systems.[8−10] Apart from the absorption reduction, the group velocity reduction due to the rapid variation of the refractive index at the resonant transition via EIT was predicted,[11] and a number of experiments have also been reported for accomplishing the light speed reduction via the EIT effect. Early direct measurements of light pulse transmission in a coherently prepared Rb media have shown a pulse velocity as slow as $c/165$,[12] and the measurements of steep dispersion of cw light transmission in Rb and Cs atomic vapours indicated the group velocity reduction of $c/13.2$ and $c/3000$.[13,14] An extremely slow light group velocity of 17 m/s was demonstrated in an ultracold atomic sample.[13] Recent theoretical analyses and experiments show that very slow group velocity of light with the same order obtained in the ultracold atoms can be observed using heated and room temperature vapour cells with buffer gas or with anti-relaxation wall coating at a proper atomic density and optical intensity.[16−18] Most of the experimental works on EIT have been performed with Rb atoms. Although for a long time similar effects have been expected in Cs vapour, experiments on it have been rare, since the Doppler broadening is over 30 times larger than the natural linewidth, which is comparable to the spacing of different fine structure in the D_2 line. For a Λ-type system within the cesium D_2 line, the large spacing of two lower hyperfine states (9.2 GHz) gives the large residual Doppler width of the two-photon transition, which is disadvantageous for the EIT effect. The above-mentioned characteristics increased the experimental difficulty in Cs vapour with respect to that in Rb atoms. In this letter, we present the results of our studies on the electromagnetically induced transparency in the cesium vapour cell. The simultaneous measurement of absorption and dispersion properties of the EIT medium show that the group velocity of the probe light is reduced to $c/418$ and at the same time the transmission is increased 60% (c is the velocity of light in vacuum).

The atomic level used in this experiment is the Λ-type level configuration within the D_2 lines of cesium atoms (^{133}Cs)(Fig. 1). A strong laser light, called the coupling laser, is locked to the transition between $6S_{1/2}$, $F = 4$ and $6P_{3/2}$, $F' = 4$, while a weak probe laser is scanned across the transitions, $F = 3$ $(6S_{1/2}) \rightarrow F' = 4(6P_{3/2})$. It has been demonstrated that when the medium interacts simultaneously with both coupling and probe laser tuned at its resonance

*Supported by the Overseas Youth Scholar Collaboration Foundation (No.69928504), the National Natural Science Foundation of China under Grant No. 69978013 and the Shanxi Province Young Science Foundation (No. 20001016).

frequency, it will become transparent, and exhibit large dispersion for the resonant probe light.

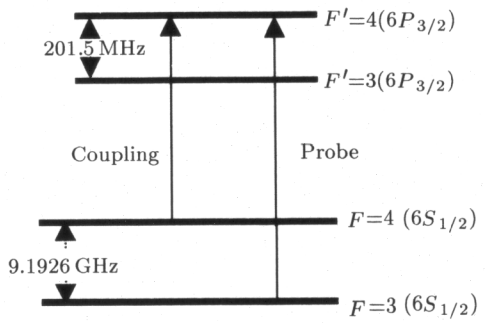

Fig. 1. Relevant energy levels of the D_2 line of ^{133}Cs involved in the experiment. The coupling laser of frequency ω_c is locked to the line centre of the $F = 4$ $(6S_{1/2})\rightarrow$ $F' = 4(6P_{3/2})$ transition, while the probe laser is tuned to the line centre of the $F = 3$ $(6S_{1/2})\rightarrow$ $F' = 4(6P_{3/2})$ transition.

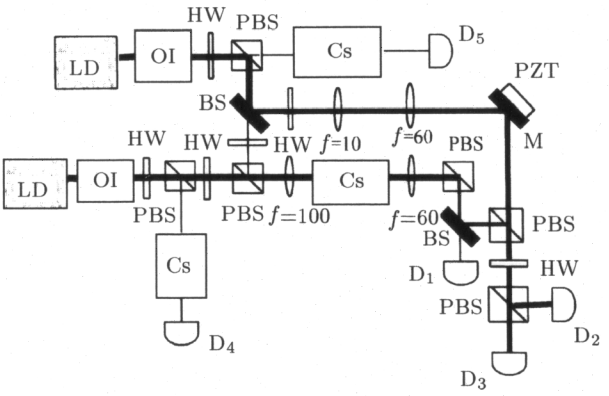

Fig. 2. Schematic diagram of the experimental set-up: LD1 and LD2, the external cavity diode lasers served as the probe and coupling beams; OI, optical isolator; HW, half wave plate; M, reflected mirror; PBS, polarized beamsplitter; PZT, piezoelectric translator; BS, beamsplitter; PD1, PD2 and PD3, photodiodes.

The experimental arrangement for the simultaneous measurement of the absorption and dispersion of the probe beam is shown in Fig. 2. Both the coupling and probe laser are the diode lasers with an external cavity, which are frequency and temperature stabilized to provide a narrow laser linewidth less than 2 MHz. The Faraday rotation isolators are used to prevent any back reflections from the surfaces of the optics. A small fraction of the coupling and probe beams are separated by PBS1 and PBS2 to be employed to monitor the laser frequency. Two Fabry–Pérot cavities serve as the monitors of the laser frequency hopping and meanwhile two standard saturated spectroscopy set-ups are used for stabilizing the frequency of the coupling laser beam to the transitions of $F = 4$ $(6S_{1/2})\rightarrow$ $F' = 4(6P_{3/2})$ and scanning the frequency of the probe laser beam through the transition from $F = 3$ $(6S_{1/2})$ to $F' = 4(6P_{3/2})$. The remaining greater parts of laser beams are brought together by PBS3 as the coupling and probe beams and propagate orthogonally polarized at PBS3 in the same direction through a 30 mm long Cs vapour cell to create effective atomic coherence. The cell kept at the room temperature is shielded with μ metal from the surrounding magnetic field to avoid the magnetic-field splitting of the sub-levels. Two lenses of $f = 100$ mm and $f = 60$ mm are located at the two sides of the cell for mode-matching between the coupling and probe beams in the cell and for collimating the output power into the detectors. The transmitted probe beam is detected by a silicon photodiode and recorded by a digital oscilloscope.

Figure 3 shows the probe transmission as a function of the probe frequency corresponding to the transitions $F = 3$ $(6S_{1/2})$ $\rightarrow$ $F' = 4(6P_{3/2})$ with the 136 μW coupling laser and 4.7 μW probe power. In Fig. 3 the behaviour of the optical intensity of the probe light passing through the Cs vapour is represented, thus the sharp peak (solid line) in the middle of the transmission dip shows that the absorption probe field at the central frequency was reduced by 60%. The dashed line represents the case without the coupling beam. The reduced absorption depends on experimental parameters such as the powers of the coupling and probe beams and the density of the atoms. For achieving the largest absorption reduction, the power of the coupling and probe lights should be carefully controlled, and the probe beam should be also checked to sufficiently weak to eliminate the saturation of atoms.

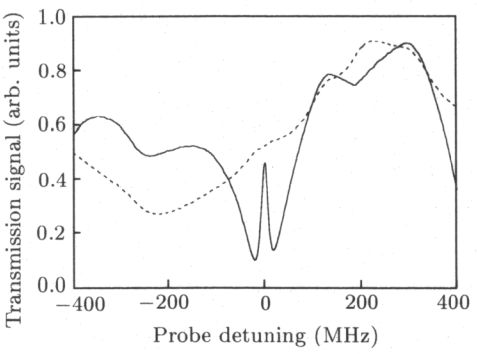

Fig. 3. Transmission probe signal versus probe detuning. The dashed line represents the transmission signal of probe light for no coupling light present, and the solid line represents the coupling light locked to the transition of $F = 4$ $(6S_{1/2})\rightarrow$ $F' = 4(6P_{3/2})$.

To measure the dispersive properties of the probe beam, one needs to detect the phase changes of the probe light after passing through the vapour cell. A Mach–Zehnder interferometer[19] is used to measure the phase of the probe beam and the local light. The

small phase difference shift $2\pi f_{\rm p} n_{\rm d} L/c$ due to the EIT medium is detected by the difference of the photocurrents in the balanced homodyne detector consisting of 50% beamsplitters, photodiodes D_2 and D_3 and a power combiner. The differences of the photocurrents are expressed by

$$\Delta I_d = 2\,|E_{\rm LO}|\,|E_{\rm P}|\,{\rm e}^{-\alpha_0 L}{\rm e}^{-\alpha(\omega)L/2} \cdot \cos(2\pi f_{\rm p} n_{\rm d} L/c + \Phi_{\rm LO}),$$

where $|E_{\rm LO}|$ and $|E_{\rm P}|$ are the amplitudes of the local light and the probe light in the interferometer, α_0 and $\alpha(\omega)$ are the absorption coefficients of the Doppler broadened medium and the EIT medium for the probe light respectively, L is the length of the cell, $f_{\rm p}$ is the frequency of the probe light, and $n_{\rm d}$ is the refractive index of the EIT medium for probe light. $\Phi_{\rm LO}$ is the reference phase of the interferometer which is controlled by the piezoelectric transducer to be $\pi/2$ for taking out the phase shift resulting from the EIT effect from cosine term of $\Delta I_{\rm d}$. In this case the phase shift introduced by the dispersive EIT medium is proportional to the different photocurrents. To avoid the influence of phase difference from the unbalance between the arms of the interferometer on the dispersion, we carefully adjusted the spatial mode-matching between two arms of interferometer to obtain an interference contrast over 92%.

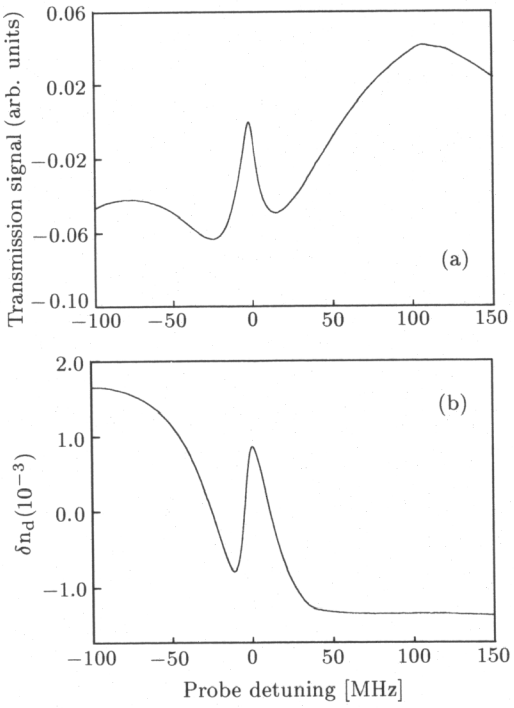

Fig. 4. Simultaneous measurement result of EIT and dispersion of the Cs atoms in the vapour cell at room temperature. (a) Transparency at the centre frequency of the probe light and (b) dispersion curve of the EIT medium.

Figure 4 shows the dispersion curve of probe light with 60% transmission. The measured power of the local light beam and the probe beam after the 30 mm vapour cell are 264 μW and 4.7 μW respectively, and the quantum efficiency of the homodyne detector is about 80%. According to these experimental parameters, we calculate the derivative of the refractive index relative to the frequency around the central frequency $\delta n_{\rm d}/d\omega = 1.89 \times 10^{-13}{\rm Hz}^{-1}$.

In conclusion, we have simultaneously measured the reduction of absorption and dispersive properties for a cw probe light transmitted in a three-level Λ-type system of Cs atoms. The very large reductions of absorption and group velocity in Cs atoms may be obtained if the anti-decoherence material is added in the cell for the increasing coherence time and the high dense atom is employed.

References

[1] Liu C, Dutton Z, Behroozi C H and Hau L V 2001 *Nature* **409** 490

[2] Zhang Z M, Liang W Q and Xie S W 2001 *Chin. Phys. Lett.* **18** 223

[3] Field J E, Hahn K H and Harris S E 1991 *Phys. Rev. Lett.* **67** 3062

[4] Matloob R, Loudon R, Barbett S M and Jeffers J 1995 *Phys. Rev.* A **52** 4823

[5] Baolong L, Burkett W H and Xiao M 1998 *Opt. Lett.* **23** 804

[6] Ward A W 1985 *J. Geophys. Res.* **90** 2038

[7] Muller M, Hornann F, Rinkleff R H, Wicht A and Danzmann K 2000 *Phys. Rev.* A **62** 060501

[8] Lu B L, Burkett W H and Xiao M 1997 *Phys. Rev.* A **56** 976

[9] Wang Y Z, Xu G, Ye C, Jia M, Zhou S Y and Liu Y S 1996 *Phys. Rev.* A **53** 1160

[10] Gao J Y, Yang S H, Wang D et al 2000 *Phys. Rev.* A **61** 023401

[11] Harris S E, Field J E and Kasapi A 1992 *Phys. Rev.* A **46** R29

[12] Kasapi A, Jain M, Yin G Y and Harris S E 1995 *Phys. Rev. Lett.* **74** 2447

[13] Xiao M, Li Y Q, Jin S Z et al 1995 *Phys. Rev. Lett.* **74** 666

[14] Schmidt O, Wynands R, Hussein Z and Meschede D 1996 *Phys. Rev.* A **53** R27

[15] Hau L V, Harris S E, Dutton Z and Behroozi C H 1999 *Nature* **397** 594

[16] Lukin M D, Fleischhauer M, Zibrov A S, Robinson H G et al 1997 *Phys. Rev. Lett.* **79** 2959

[17] Kash M M, Sautenkov V A, Zibrov A S et al 1999 *Phys. Rev. Lett.* **82** 5229

[18] Kowalski F K, Hill W T and Schawlow A L 1978 *Opt. Lett.* **2** 112

[19] Budker D, Kimball D F, Rochester S M and Yashchuk V V 1999 *Phys. Rev. Lett.* **83** 1767