Controlling light by light with three-level atoms inside an optical cavity

Hai Wang, David Goorskey, and Min Xiao

Department of Physics, University of Arkansas, Fayetteville, Arkansas 72701

Received January 23, 2002

We present our experimental demonstration of controlling the cavity output intensity of one laser beam with the intensity of another laser beam in a composite system consisting of a collection of three-level Λ-type rubidium atoms and an optical ring cavity. When the intensity of the controlling beam is modulated with a square waveform, the cavity output power switches on and off (with a distinction ratio better than 20:1) between two steady-state values. This all-optical switching effect is the result of combined absorption and enhanced Kerr nonlinearity near resonance in such three-level atomic systems because of atomic coherence and can find applications in optical communication and optical computation. © 2002 Optical Society of America

OCIS codes: 190.1450, 190.3270, 230.1150, 030.1670, 160.4330.

Controlling light with light is essential in all-optical communication and optical computing. Optical bistability in systems containing saturable two-level atoms inside an optical cavity was considered to be an ideal mechanism for achieving controllable optical switching.[1] The optical switching of the cavity output field between the two steady states in the bistable region can be controlled by the input field intensity pattern. However, such optical switching action is not easy to achieve, although other effects such as optical bistability,[1,2] instability,[3] and quantum statistical properties[4,5] in such composite systems (involving two-level atoms and an optical cavity) were all studied many years ago. The important issue is what should be used to control the ON–OFF states of the cavity output power. In the traditional optical bistability systems the only controllable optical beam is the input field, which is part of the bistable curve in the input–output plot. In this case the cavity field intensity is controlled not by another laser beam but by its own input field.

The situation is different when the two-level atomic medium is replaced with a three-level electromagnetically induced transparency system,[6–8] in which the controlling (coupling) beam can be used to control the switching (probe) beam. In this Letter we present our experimental demonstration of a true all-optical switch in a system containing three-level atoms inside an optical ring cavity. Although optical bistability exists in such a system,[9,10] the switching does not occur between the two steady states of a single bistable curve; instead, it occurs between two distinct steady-state curves corresponding to setups with and without the controlling beam. The difference in the two steady-state curves is caused by the combined effects of absorption change and enhancement of Kerr nonlinearity that results from atomic coherence near resonance.[11] This is different from the absorptive photon switching demonstrated earlier in a four-level atomic system.[12]

The three-level Λ-type rubidium atomic system is the same as used in Ref. 10, where $F = 1$ (state $|1\rangle$) and $F = 2$ (state $|3\rangle$) states of $5S_{1/2}$ are the two lower states and $F' = 2$ (state $|2\rangle$) of $5P_{1/2}$ serves as the upper state. The controlling laser beam (with frequency ω_c) couples states $|3\rangle$ and $|2\rangle$, whereas the switching beam (with frequency ω_p) interacts with states $|1\rangle$ and $|2\rangle$. The controlling frequency detuning is defined as $\Delta_c = \omega_c - \omega_{23}$, and the switching frequency detuning from the atomic transition is defined as $\Delta_p = \omega_p - \omega_{12}$, where ω_{23} and ω_{12} are atomic transition frequencies from states $|2\rangle$ and $|3\rangle$ and from states $|1\rangle$ and $|2\rangle$, respectively. The experimental setup is shown in Fig. 1 with an atomic vapor cell containing such three-level atoms placed inside a three-mirror optical ring cavity. Both the controlling (LD1), and the switching (LD2) lasers are single-mode diode lasers that are current and temperature stabilized. The frequencies of these two diode lasers are further stabilized by use of optical feedback through servo-loop-controlled mirrors. Parts (~10%) of the switching and the controlling beams are split by polarizing beam splitters PB4 and PB2 to a saturation absorption spectroscopy (SAS) setup to monitor the frequency detunings of the two lasers. The optical ring cavity is composed of three mirrors. The flat mirror M2 and the concave mirror M1 (R = 10 cm) have ~1% and ~3% transmission, respectively. The third cavity mirror [concave with (R = 10 cm)] is

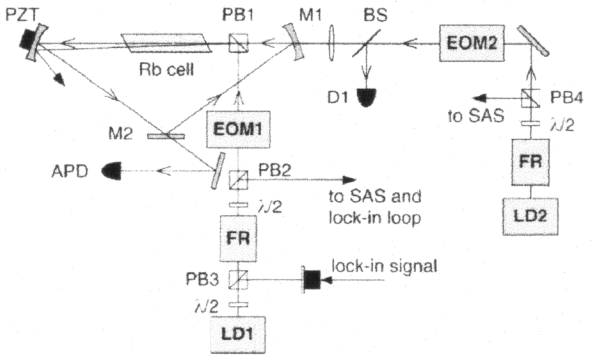

Fig. 1. Experimental setup: FRs, Faraday rotators; APD, avalanche photodiode; BS, beam splitter; D1, diode laser 1; PB1, PB4, polarizing beam splitters. Other abbreviations defined in text.

0146-9592/02/151354-03$15.00/0

mounted on a piezoelectric transducer (PZT) with reflectivity larger than 99.5%. The finesse of the empty cavity is ~100 with a free spectral range of 822 MHz (cavity length is 37 cm). The rubidium vapor cell is 5 cm long with Brewster windows and is wrapped in a magnetic shielding metal and heated to 70 °C. The switching field enters the cavity through mirror M1 and circulates inside the optical ring cavity as the cavity field. The controlling beam is introduced through polarization beam splitter PB1 with orthogonal polarization to the cavity field and is misaligned by a small angle (<1°) to avoid its circulation inside the optical cavity. The radii of the controlling and the switching beams are estimated to be 700 and 80 μm, respectively. With the insertion losses of PB1 and reflections from the windows of the atomic cell, the cavity finesse (with rubidium atoms far off resonance) is degraded to ~50. The cavity input intensity of the switching field is controlled by an electro-optic modulator (EOM2). The frequencies of the controlling and the switching beams are precisely controlled by means of locking them to two separate Fabry–Perot cavities. One great advantage in the current experimental arrangement is the use of two-photon Doppler-free configuration by means of propagating the controlling beam collinearly with the cavity field, which eliminates the first-order Doppler effect.[7,8]

We first measure the absorption and Kerr-nonlinear index of refraction of the system. Without the optical cavity and with scanning Δ_p, the single-pass absorption is measured to be approximately 5–6% for $P_c = 0$ (the small absorption in this case is due to saturation) and approximately 13–15% for $P_c = 14.3$ mW at $\Delta_p = 0$ with a probe-beam power of 120 μW and $\Delta_c = 7$ MHz, at which the switch will operate. We then stop the frequency scan of the switching beam and set it at $\Delta_p = 0$ and close the optical cavity. The cavity is then scanned from longer length to shorter length by a ramp voltage on the PZT with the above experimental conditions for $P_c = 0$ and $P_c = 14.3$ mW. The cavity transmission profiles are given in Fig. 2. As one can see, for $P_c = 0$ (curve a) the cavity transmission profile is narrower and basically symmetric, which gives a small Kerr-nonlinear index of refraction ($n_2 = -8.1 \times 10^{-9}$ cm^2/W). However, for $P_c = 14.3$ mW (curve b) the cavity transmission profile becomes asymmetric corresponding to a larger Kerr-nonlinear index ($n_2 = 2.5 \times 10^{-7}$ cm^2/W).[11] The smaller value of n_2 measured here (in comparison with the results in Ref. 11) is due to the higher intensity of the cavity field used in this experiment, which reduces the measured nonlinear index. The shifts in resonance peaks of the transmission profiles result from the linear and the nonlinear dispersion effects near resonance.[13] The optical ring cavity is then locked onto a third laser beam (whose cavity resonance is shown by curve c of Fig. 2), which can be tuned to give a cavity frequency detuning of Δ_θ. With the locked optical cavity, the input cavity power is scanned with EOM2 for the same two controlling-beam powers ($P_c = 0$ and $P_c = 14.3$ mW) with $\Delta_p = 0$ and $\Delta_c = 7$ MHz. The input–output intensity curves for the two cases (without and with controlling beam) are shown in Figs. 3(a) and Fig. 3(b), respectively. Optical bistability clearly appears in Fig. 3(b) when the Kerr nonlinearity is large with the controlling beam on. The difference in these two steady-state curves is the combined effects of the near-resonant absorption and the enhancement of Kerr nonlinearity, also near resonance. We then set the cavity input power to $P_p^{\text{in}} = 240$ μW and modulate the controlling power with EOM1 with a square waveform. When the power of the controlling beam is turned on and off (Fig. 4, bottom), the cavity transmission power is also switched between two steady-state values (Fig. 4, top), to form an all-optical switching action with a switching ratio better than 20:1.

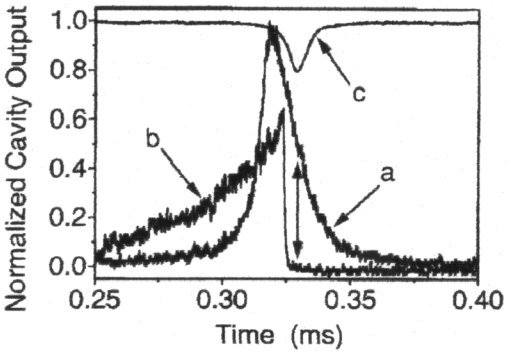

Fig. 2. Cavity transmission by means of cavity-length scan. a, $\Delta_c = 7$ MHz, $P_p^{\text{in}} = 240$ μW, $P_c = 0$. b, $P_c = 14.3$ mW, with other parameters the same. c, Frequency of the reference laser beam used to lock the ring cavity.

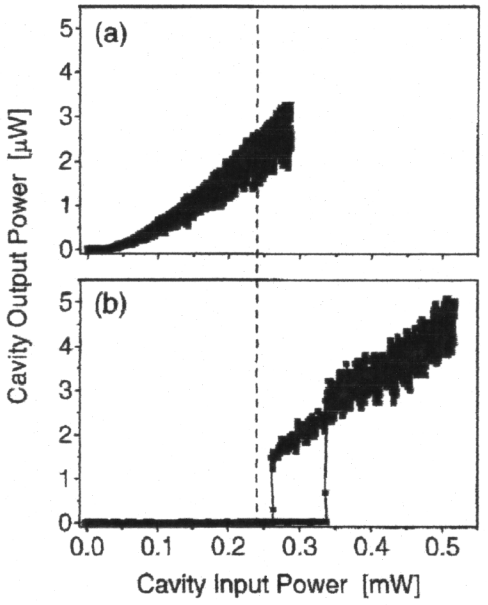

Fig. 3. Cavity transmission power versus cavity input power. These are the steady-state curves of the system for (a) $P_c = 0$ and (b) $P_c = 14.3$ mW, with $\Delta_c = 7$ MHz, $\Delta_p = 0$, and $P_p^{\text{in}} = 240$ μW. These curves were taken with cavity input intensity scanning up and then down.

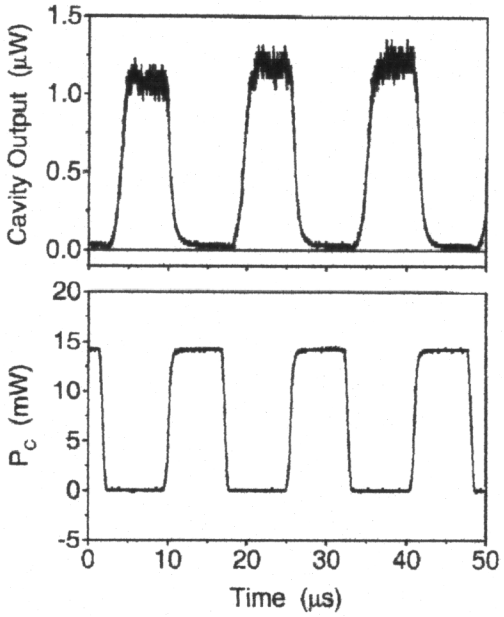

Fig. 4. Optical switching of the cavity field controlled by the controlling beam. Top, ON and OFF states of the cavity field. Bottom, modulated controlling power.

The switching mechanism can easily be seen from Figs. 2 and 3. The two cavity transmission curves in Fig. 2 correspond to the two controlling-power values ($P_c = 0$ and $P_c = 14.3$ mW). When the optical cavity is locked at $\Delta_\theta = 4.6$ MHz from the transmission peak of curve a and P_c switches between two values, the cavity transmission power also switches between the two steady-state values (indicated by the arrow) with a good switching ratio. Looking at Fig. 3, one can see that the change of P_c changes the steady-state curves and forces the cavity to operate at different intracavity intensities. Without the controlling beam ($P_c = 0$), the cavity transmission increases monotonically as the cavity input power increases as a result of the saturation, as shown in Fig. 3(a). In such a case, the absorption is small approximately 5–6% per pass) and the nonlinearity is also small. However, with a controlling-beam power of $P_c = 14.3$ mW, the cavity transmission is suppressed for low cavity input power until it reaches the bistable region near $P_p^{\text{in}} = 260$ μW because of the high absorption approximately 13–15% per pass). At the same time, the Kerr-nonlinear index of refraction is also higher to generate the bistable behavior. Our switching experiment operates at the cavity input power of $P_p^{\text{in}} = 240$ μW (dashed line in Fig. 3), which is before the bistable region is reached. The thick curves of Fig. 3(a) and the ascending branch of Fig. 3(b) are the results of not being able to lock the cavity stable long enough during the scanning up and subsequently scanning down from the cavity input power.

This kind of switching action can be achieved in a broad range of parameter space, since both absorption and nonlinearity can be used for dramatically altering the steady-state behaviors of such composite systems involving multilevel atoms and an optical cavity. The switching speed of a few microseconds is currently limited by EOM1 (the driver for EOM1 operates at up to 200 kHz for a sinusoidal waveform) used to switch the controlling power. This experimental demonstration is an important step in understanding the roles played by absorption and enhanced nonlinearity in such an electromagnetically-induced transparency system and is designed for achieving an all-optical switch at low intensity levels.[14,15]

In summary, we have demonstrated an all-optical switch by controlling the cavity transmission power with controlling-beam intensity in a three-level Λ-type atomic system inside an optical ring cavity. The change in the two steady states is created by the large differences in the absorption and the Kerr-nonlinear index of refraction enhanced by atomic coherence in such a three-level electromagnetically induced transparency system with and without the controlling beam. Although the switching action was not between two steady states of a single bistable curve, the current system is more efficient and robust. The switching ratio can easily reach the level of 20:1 with a switching speed of 1 μm. With further system optimization and technical improvements, we can improve the performance (in switching ratio and speed) of such all-optical switching, especially to operate it at much lower intensity levels. This kind of all-optical switching can find applications in optical communication, all-optical computation, and quantum information processing.

We acknowledge funding support from the National Science Foundation. M. Xiao (mxiao@mail.uark.edu) is currently with the Institute of Opto-Electronics, Shanxi University, Shanxi, Taiyuan, China.

References

1. H. Gibbs, *Optical Bistability: Controlling Light with Light* (Academic, New York, 1985).
2. A. T. Rosenberger, L. A. Orozco, H. J. Kimble, and P.D. Drummond, Phys. Rev. A **43,** 6284 (1991).
3. L. A. Orozco, A. T. Rosenberger, and H. J. Kimble, Phys. Rev. Lett. **53,** 2547 (1984).
4. M. G. Raizen, L. A. Orozco, M. Xiao, T. L. Boyd, and H. J. Kimble, Phys. Rev. Lett. **59,** 198 (1987).
5. G. T. Foster, L. A. Orozco, H. M. Castro-Beltran, and H. J. Carmichael, Phys. Rev. Lett. **85,** 3149 (2000).
6. S. E. Harris, Phys. Today (July, 1997), p. 36.
7. J. Gea-Banacloche, Y. Li, S. Jin, and M. Xiao, Phys. Rev. A **51,** 576 (1995).
8. Y. Li and M. Xiao, Phys. Rev. A **51,** R2703 (1995).
9. H. Wang, D. J. Goorskey, and M. Xiao, Phys. Rev. A **65,** R011801 (2002).
10. W. Harshawardhan and G. S. Agarwal, Phys. Rev. A **53,** 1812 (1996).
11. H. Wang, D. J. Goorskey, and M. Xiao, Phys. Rev. Lett. **87,** 073601 (2001).
12. M. Yan, E. G. Rickey, and Y. Zhu, Phys. Rev. A **64,** 041801 (2001).
13. M. Xiao, Y. Li, S. Jin, and J. Gea-Banacloche, Phys. Rev. Lett. **74,** 666 (1995).
14. S. E. Harris and L. V. Hau, Phys. Rev. Lett. **82,** 4611 (1999).
15. A. Imamoglu, H. Schmidt, G. Woods, and M. Deutsch, Phys. Rev. Lett. **79,** 1467 (1997).