Continuous-wave single-frequency laser with dual wavelength at 1064 and 532 nm

Chenwei Zhang, Huadong Lu,* Qiwei Yin, and Jing Su

State Key Laboratory of Quantum Optics and Quantum Optics Devices, Institute of Opto-Electronics, Shanxi University, Taiyuan, Shanxi 030006, China

*Corresponding author: luhuadong@sxu.edu.cn

Received 7 August 2014; accepted 21 August 2014;
posted 25 August 2014 (Doc. ID 220401); published 22 September 2014

A continuous-wave high-power single-frequency laser with dual-wavelength output at 1064 and 532 nm is presented. The dependencies of the output power on the transmission of the output coupler and the phase-matching temperature of the LiB_3O_5 (LBO) crystal are studied. An output coupler with transmission of 19% is used, and the temperature of LBO is controlled to the optimal phase-matching temperature of 422 K; measured maximal output powers of 33.7 W at 1064 nm and of 1.13 W at 532 nm are obtained with optical–optical conversion efficiency of 45.6%. The laser can be single-frequency operated stably and mode-hop-free, and the measured frequency drift is less than 15 MHz in 1 min. The measured M_x^2 and M_y^2 for the 1064 nm laser are 1.06 and 1.09, respectively. The measured M_x^2 and M_y^2 for the 532 nm laser are 1.12 and 1.11, respectively. © 2014 Optical Society of America

OCIS codes: (140.3460) Lasers; (140.3515) Lasers, frequency doubled; (140.3560) Lasers, ring; (140.3570) Lasers, single-mode.

http://dx.doi.org/10.1364/AO.53.006371

1. Introduction

Laser-diode (LD) pumped all-solid-state continuous-wave (CW) lasers with single-frequency operation have been extensively utilized in a variety of scientific research and technology applications owing to their advantages, such as good beam quality, high stability, and low intensity noise. In the past 20 years, extensive efforts have been made for producing high-power single-frequency Nd:YVO_4 lasers with wavelength of 1064 or 532 nm. A mode-hop-free single-longitudinal-mode (SLM) 1064 nm Nd:YVO_4 laser with output power of 25 W, linewidth of less than 2.5 MHz, and optical–optical conversion efficiency of 35% was designed and built by Coherent Inc. [1]. Innolight GmbH also supplies a commercial product of a SLM 1064 nm laser with a maximal output power of 55 W, frequency bandwidth of ~1 kHz, and M^2 value of ~1.3, respectively [2]. Recently, we theoretically and experimentally investigated the physical conditions of single-frequency operation for high-power all-solid-state lasers [3]. By inserting a nonlinear crystal into the resonator, a stable single-frequency 1064 nm laser with output power of 33.7 W was obtained. Regarding single-frequency 532 nm lasers, Coherent Inc. supplies commercial single-frequency 532 nm lasers, whose highest output power is 18 W corresponding to an optical–optical conversion efficiency of 25% [4]. In 2012, our group implemented a single-frequency 532 nm laser with output power up to 25 W by combining the two methods of direct pumping [5] and self-compensation of astigmatism [6]. So far, less attention has been payed to research on high-power lasers with dual-wavelength output at 1064 and 532 nm, to the best of our knowledge. However, this kind of laser is important for many research and application fields. For example, in quantum optics experiments, it can be used to generate multipartite entangled states, where the single-frequency 532 nm laser is used as the pump and the single-frequency 1064 nm laser

1559-128X/14/286371-04$15.00/0
© 2014 Optical Society of America

acts as the signal for the optical parametric amplifiers (OPAs) [7]. In the atomic physics fields, single-frequency 1064 and 532 nm lasers can be used to generate the red-detuning [8] and blue-detuning [9] magneto-optical trap (MOT) to cool and trap the atoms, respectively.

In this paper, we present a CW high-power single-frequency Nd:YVO_4 laser with dual-wavelength output at 1064 and 532 nm with LiB_3O_5 (LBO) as the intracavity doubling crystal. First, the dependence of the output powers of 1064 and 532 nm on the transmission of the output coupler is studied experimentally and theoretically. The experimental results are in good agreement with the theoretical calculation. Then, the influence of the phase-matching temperature of LBO crystal on the output powers of 1064 and 532 nm is also investigated.

2. Theoretical Analysis

Intracavity second harmonic generation (SHG) in a solid-state resonator is a feasible way to get dual-wavelength lasers with output of fundamental and second harmonic (SH) waves. Because the nonlinear loss of the fundamental wave can suppress multi-longitudinal-mode (MLM) oscillating and mode hopping, it is also an effective method to obtain stable single-frequency lasers [10]. For a stable single-frequency laser with intracavity nonlinear conversion loss (ε), the oscillation condition is expressed as [11]

$$gl = t + L + \varepsilon, \tag{1}$$

where g is the gain coefficient per unit length of the laser medium, l is the length of the laser medium, t is the transmission of the output coupler, L is the round-trip intracavity loss, ε is the nonlinear conversion efficiency, and

$$g = \frac{g_0}{1 + \frac{I}{I_0}}, \tag{2}$$

where g_0 is the small signal gain factor, and I and I_0 are the fundamental wave intensity and saturation intensity, respectively.

The nonlinear conversion efficiency ε equals to

$$\varepsilon = \eta I, \tag{3}$$

where η is the factor of the nonlinear conversion.

Using Eqs. (1)–(3), the fundamental wave intensity can be given as

$$I = \frac{\sqrt{(t + L - I_0\eta)^2 + 4\eta I_0 g_0 l} - (t + L + I_0\eta)}{2\eta} \tag{4}$$

and

$$g_0 l = KP_{\text{in}}, \tag{5}$$

where K is the factor of the pump and P_{in} is the pump power.

The output power of the fundamental (P_f) and SH (P_{sh}) can be expressed as

$$P_f = AtI \tag{6}$$

and

$$P_{sh} = \varepsilon AI = \eta AI^2, \tag{7}$$

where A stands for the average transverse cross section of the laser beam in the gain medium. When the resonator is designed and the laser medium is chosen, the output powers of the fundamental wave P_f and SH P_{sh} are decided by the transmission of the output coupler (t) and the nonlinear conversion efficiency (ε). In the experiment, by changing the transmission of the output coupler and tuning the temperature of nonlinear crystal, the output powers of the fundamental and SH can be manipulated.

3. Experimental Setup

An all-solid-state CW single-frequency laser with dual-wavelength output at 1064 and 532 nm was designed and built, as shown in Fig. 1. The pump source is a CW fiber-bundled LD with maximum output power of 80 W and center wavelength of 888 nm (LIMO80-F400-DL888EX1458). The diameter and the numerical aperture (NA) of the coupling fiber are 400 μm and 0.22, respectively. The LD pump beam was coupled into the gain medium by a telescope system consisting of the lenses f_1 and f_2 with focal length of 30 and 80 mm, respectively. A figure-eight-shaped ring resonator was constructed by four mirrors (M_1-M_4). The input coupler M_1 was a convex mirror and high reflection (HR) coated at 1064 nm ($R_{1064\,\text{nm}} < 99.7\%$) and high transmission (HT) coated at 888 nm ($T_{888\,\text{nm}} > 95\%$). A convex mirror M_2 and a concave mirror M_3 were HR coated at 1064 nm ($R_{1064\,\text{nm}} > 99.7\%$). The output coupler M_4 was a concave mirror and partial transmission coated at 1064 nm (with the transmission of t) and HT coated at 532 nm ($T_{532\,\text{nm}} > 95\%$). The curvature radii of convex mirrors M_1 and M_2 are both 1500 mm. The curvature radii of concave mirrors M_3 and M_4 are both 100 mm. The gain medium was a composite

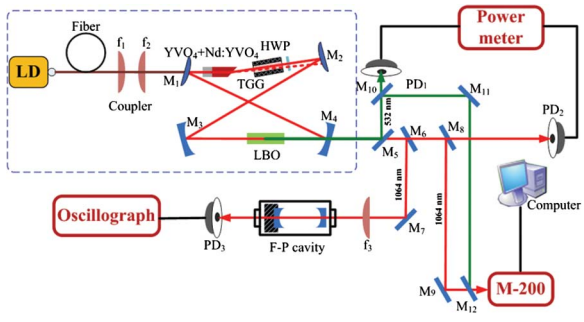

Fig. 1. Experimental setup of the single-frequency laser with dual wavelength.

YVO_4/Nd:YVO_4 (yttrium vanadate/Nd^{3+}-doped yttrium vanadate) rod with a length of 23 mm (including undoped end cap of 3 mm and Nd-doped part of 20 mm with the Nd concentration of 0.8 at. %) and a wedge end facet of $\alpha = 1.5°$. The Nd:YVO_4 crystal was cut along the a axis, and both end faces were polished and antireflection coated at 1064 and 888 nm ($R_{1064\,\mathrm{nm},888\,\mathrm{nm}} < 0.25\%$). Based on the large birefringent property of the Nd:YVO_4 crystal, the wedge crystal can act as a polarizing beam splitter to suppress the oscillation of the unwanted modes in a ring resonator [12]. An optical diode formed by a half-wave plate (HWP) and a terbium gallium garnet (TGG) crystal was used to enforce the laser unidirectional operation. A type-I noncritically phase-matched LBO crystal with dimensions of 3 mm × 3 mm × 18 mm was chosen for intracavity frequency doubling because of its high damage threshold and large temperature and angular acceptances. It was inserted into the ring laser cavity between M_3 and M_4 and temperature controlled to an accuracy of ±0.005 K (YG-2009B, YuGuang Co. Ltd).

The fundamental and SH output were separated by a dichroic mirror M_5 HR coated at 532 nm and HT coated at 1064 nm. The output power was measured by a power meter (LabMax-TOP, Coherent). The longitudinal mode of the laser was monitored by a scanning Fabry–Perot (F-P) interferometer with a free spectral range of 750 MHz and finesse of 100, and recorded by a digital storage oscilloscope (Tektronix DPO 4054). The beam quality was measured by a laser beam analyzer ($M^2 - 200$, Spiricon Inc.).

4. Experimental Results

When the temperature of LBO was controlled to the optimal phase-matching temperature of 422 K, the measured output powers of CW single-frequency 1064 and 532 nm lasers as functions of the incident pump power at difference t of the output coupler are shown in Figs. 2 and 3. Using the output coupler with t of 19%, the pump threshold is 31.6 W, and the maximal output power of 33.7 W at 1064 nm can be achieved, but 532 nm output power is only 1.13 W

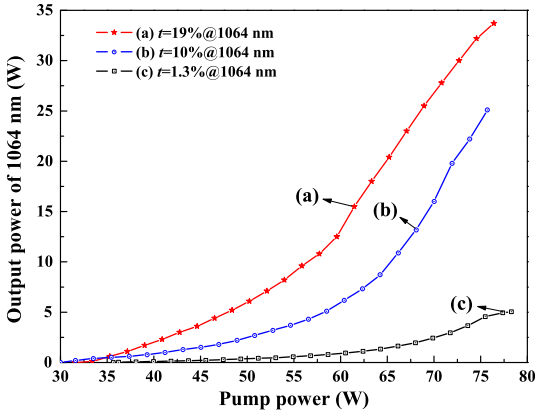

Fig. 2. Output power of 1064 nm laser versus pump power. (a) $t = 19\%$, (b) $t = 10\%$, and (c) $t = 1.3\%$.

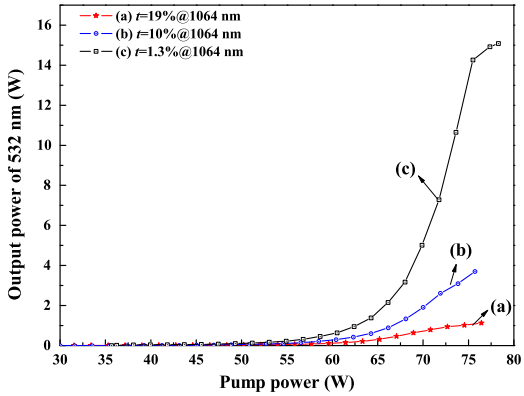

Fig. 3. Output power of 532 nm laser versus pump power. (a) $t = 19\%$, (b) $t = 10\%$, and (c) $t = 1.3\%$.

under the pump power of 76.4 W. The optical–optical conversion efficiency is 45.6%. When the t of the output coupler is 10%, the output powers of 1064 and 532 nm are 25.1 and 3.7 W, respectively, with a pump threshold of 30 W and an optical–optical conversion efficiency of 38%. When the output coupler with t of 1.3% is used, the maximal output power of 15.5 W at 532 nm can be obtained, but 1064 nm output power is only 5.05 W, with a pump threshold of 29 W and an optical–optical conversion efficiency of 26.5%.

Using the laser parameters ($L = 4.6\%$, $I_0 = 8.30827 \times 10^6\ \mathrm{W/m^2}$, $A = 1\ \mathrm{mm^2}$, $K = 0.07\ \mathrm{W^{-1}}$, $P_{\mathrm{in}} = 75$ W, and $\eta = 4.5 \times 10^{-11}\ \mathrm{m^2/W}$) and Eqs. (6) and (7), the relation between the maximum output power of 1064 and 532 nm with t of the output coupler can be theoretically calculated, as shown in Fig. 4 (solid and dashed lines). The circles and triangles in Fig. 4 are the experimental data. It is clear that the experimental results are in good agreement with the theoretical expectation.

When the output coupler with t of 19% is utilized, the dependence of the maximum output power of 1064 and 532 nm on the temperature of LBO crystal at the pump power of 76.4 W is also investigated. The experiment results are shown in Fig. 5. When the temperature of LBO crystal was controlled to the optimal phase-matching temperature of 422 K, the

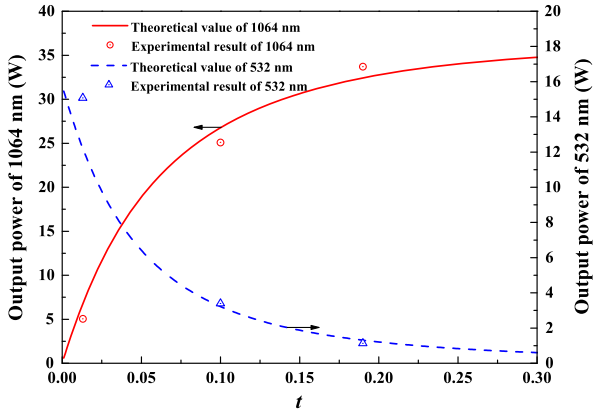

Fig. 4. Output powers versus t of the output coupler.

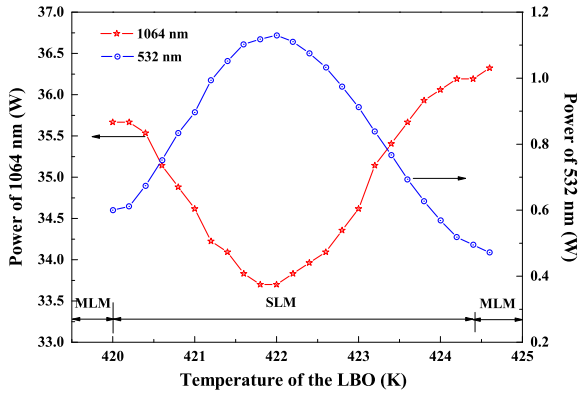

Fig. 5. Output power of 1064 and 532 nm versus the temperature of LBO.

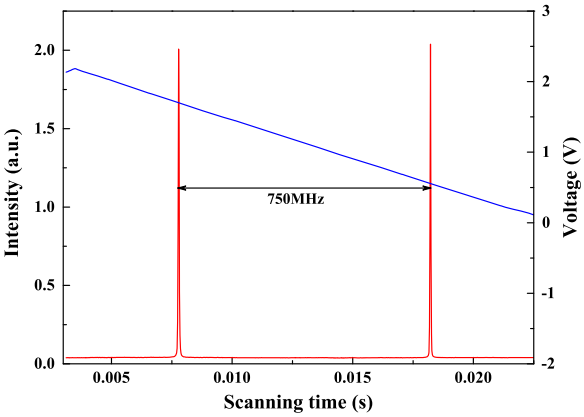

Fig. 6. Transmission intensity of the scanning F-P interferometer.

maximal output power of the CW single-frequency 532 nm laser can be realized, that is, 1.13 W, and 1064 nm output power is 33.7 W. With the detuning of the LBO crystal temperature from 422 K, the output power of 1064 nm increases and that of 532 nm decreases. The LBO crystal that was used in the cavity to get dual-wavelength output introduces a nonlinear loss for the fundamental wave to suppress MLM oscillating and mode hopping, so the obtained laser can be SLM operated stably. The transmission intensity of the scanned confocal F-P interferometer is shown in Fig. 6. There is only a SLM, and the measured frequency drift was less than 15 MHz in 1 min. The beam qualities of 1064 and 532 nm are both measured by a laser beam analyzer. The measured M_x^2 and M_y^2 for the 1064 nm laser are 1.06 and 1.09, respectively. The measured M_x^2 and M_y^2 for the 532 nm laser are 1.12 and 1.11, respectively. When the temperature of the LBO is increased to 424 K, the measured maximum single-frequency 1064 nm output power of 36.2 W can be obtained and the 532 nm output decreases to 0.5 W. Once the temperature of the LBO is lower than 420 K or higher than 424 K, the laser will be in MLM operation. This shows that the nonlinear loss is too small to suppress nonlasing mode oscillation.

5. Conclusions

In summary, a CW high-power single-frequency laser with dual-wavelength output at 1064 and 532 nm is demonstrated, and the dependencies of the output powers of single-frequency 1064 and 532 nm lasers on the transmission of the output coupler and the phase-matching temperature of the LBO crystal are investigated. When the transmission of the output coupler decreases from 19% to 1.3%, the output power of fundamental wave 1064 nm decreases from 33.7 to 5.05 W, and the SH wave 532 nm increases from 1.13 to 15.08 W, respectively. The experimental results are in good agreement with the theoretical expectations. The output power of the 1064 and 532 nm lasers can also be manipulated by controlling the phase-matching temperature of the LBO crystal. Because the LBO crystal also introduces a nonlinear loss for the fundamental wave, the dual-wavelength lasers can be single-frequency operated stably and mode-hop-free. This kind of laser can supply different output powers at 1064 and 532 nm that can be used in the research fields of quantum optics and atomic physics.

This research was supported by the National Natural Science Foundation of China (Grant Nos. 61405107, 61227015, and 61227902), the Natural Science Foundation of Shanxi (Grant No. 2014021011-3), Scientific and Technological Innovation Programs of Higher Education Institutions in Shanxi (Grant No. 2013104), and Scientific and Researchful Training for Undergraduate in Shanxi University (Grant No. 2014012176).

References

1. K. M. Murdoch, D. A. Clubley, and M. J. Snadden, "A mode-hop-free tunable single-longitudinal-mode Nd:YVO_4 laser with 25 W of power at 1064 nm," Proc. SPIE **7193**, 71930 (2009).
2. http://www.coherent.com/Products/index.cfm?2064/Mephisto-Mephisto-S.
3. H. Lu, J. Su, Y. Zheng, and K. Peng, "Physical conditions of single-longitudinal-mode operation for high-power all-solid-state lasers," Opt. Lett. **39**, 1117–1120 (2014).
4. http://www.coherent.com/products/?1852/Verdi-V-Series.
5. J. Liu, Z. Wang, H. Li, Q. Liu, and K. Zhang, "Stable, 12 W, continuous-wave single-frequency Nd:YVO_4 green laser polarized and dual-end pumped at 880 nm," Opt. Express **19**, 6777–6782 (2011).
6. Y. J. Wang, Y. H. Zheng, Z. Shi, and K. C. Peng, "High-power single-frequency Nd:YVO_4 green laser by self-compensation of astigmatisms," Laser Phys. Lett. **9**, 506–510 (2012).
7. X. Su, Y. Zhao, S. Hao, X. Jia, C. Xie, and K. Peng, "Experimental preparation of eight partite cluster state for photonic qumodes," Opt. Lett. **37**, 5178–5180 (2012).
8. S. Kuhr, W. Alt, and D. Schrader, "Deterministic delivery of a single atom," Science **293**, 278–280 (2001).
9. A. N. Nikolov, E. E. Eyler, X. T. Wang, J. Li, H. Wang, W. C. Stwalley, and P. L. Gould, "Observation of ultracold ground-state potassium molecules," Phys. Rev. Lett. **82**, 703–706 (1999).
10. K. I. Martin, W. A. Clarkson, and D. C. Hanna, "Self-suppression of axial mode hopping by intracavity second-harmonic generation," Opt. Lett. **22**, 375–377 (1997).
11. W. Koechner, *Solid State Laser Engineering* (Springer, 1999), pp. 88–110.
12. Y. Zheng, F. Li, Y. Wang, K. Zhang, and K. Peng, "High-stability single-frequency green laser with a wedge Nd:YVO_4 as a polarizing beam splitter," Opt. Commun. **283**, 309–312 (2010).