Research Article Vol. 5, No. 4 / 15 Apr 2026 / Optics Continuum 1108
OPTICS CONTINUUM

Experimental preparation of picosecond pulsed squeezed light carrying orbital angular momentum

YAN LIU,[1] JUN LIU,[1] XIAOWEI WU,[1] AND XIAOLONG SU[1,2,*]

[1]State Key Laboratory of Quantum Optics Technologies and Devices, Institute of Opto-Electronics, Shanxi University, Taiyuan, 030006, China
[2]Collaborative Innovation Center of Extreme Optics, Shanxi University, Taiyuan, Shanxi 030006, China
*suxl@sxu.edu.cn

Abstract: A squeezed state is a key quantum resource for quantum information processing and quantum metrology. It is essential to extend the dimension of the squeezed state for spatially multiplexed large-capacity quantum communication and quantum precision measurements. Here, we report the experimental preparation of a picosecond pulsed squeezed state carrying orbital angular momentum (OAM). By modulating bright pulsed squeezed light with a spatial light modulator, we generate a squeezed state with Laguerre-Gaussian distribution, whose topological charges are up to $l = 20$ and squeezed noise is 1.22 dB below the shot noise level. The presented bright picosecond pulsed squeezed light carrying high-order OAM provides promising resources for high-dimensional quantum information processing.

© 2026 Optica Publishing Group under the terms of the Optica Open Access Publishing Agreement

1. Introduction

As a fundamental quantum resource, the squeezed state of light plays a key role in quantum communication [1–4], quantum computation [5–7], and quantum metrology [8–11]. According to the Heisenberg uncertainty principle, a squeezed state exhibits quantum noise below the shot-noise level (SNL) in one quadrature, accompanied by increased noise in the conjugate quadrature [5,12]. The redistribution of quantum noise fluctuations make squeezing state attracting extensive interest. The most common approach to generate squeezed state is through nonlinear optical interaction, where photons are emitted in either degenerate or non-degenerate configurations, giving rise to single-mode and two-mode squeezing [13,14]. By enhancing nonlinear interaction strength and carefully optimizing optical losses, the squeezing level has been continuously improved over the past decades [15–19]. However, these reports are based on continuous-wave systems, where both the output power and squeezing bandwidth are limited. To overcome these constraints, optical parametric amplifiers (OPA) pumped by pulsed lasers provide an effective route.

With high peak power and broad spectral bandwidth of pulsed lasers, the pulsed squeezed state can be efficiently prepared through a single-pass OPA. An early experimental demonstration of pulsed squeezed state achieved a noise reduction of approximately 0.6 dB below the SNL [20]. Using nonlinear waveguide and temporally shaped local oscillator pulse, a pulsed vacuum squeezed state with a squeezing level of up to 5 dB is realized later [21,22]. Compared with pulsed vacuum state, the bright pulsed squeezed light combining the noise-reduction advantages with detectable high intensities, enabling applications in high-precision optical measurements [23] and quantum-enhanced nonlinear microscopy [24]. For example, amplitude squeezing of 1.3 dB at 1064 nm with an output power of 3 mW has been demonstrated in quantum-enhanced nonlinear imaging [25]. These properties make bright pulsed squeezed light an essential resource for exploring advanced quantum technologies.

Vortex beams are a class of optical fields with helical phase fronts, which carry orbital angular momentum (OAM) and can provide an additional degree of freedom for the light

#591642 https://doi.org/10.1364/OPTCON.591642
Journal © 2026 Received 26 Jan 2026; revised 15 Mar 2026; accepted 21 Mar 2026; published 2 Apr 2026

OPTICS CONTINUUM

[26–29]. The different OAM modes of vortex light are mutually orthogonal, providing a route for high-dimensional information processing [30]. Therefore, a squeezed state carrying OAM can be used to realize large-capacity quantum communication networks [31–33]. However, research on picosecond pulsed squeezed state carrying OAM remains limited.

In this work, we experimentally generate picosecond pulsed squeezed state carrying OAM by applying a spatial light modulator (SLM). By interfering the picosecond pulsed squeezed state carrying OAM with a spherical reference beam, the topological charges of the squeezed light are determined. Using a resonant intensity detector, squeezing level of the bright squeezed state with topological charges up to $l = 20$ are observed. With the increase of topological charges of Laguerre-Gaussian (LG) modes, the squeezing level of picosecond pulsed squeezed state carrying OAM does not change obviously. These results confirm the successful preparation of picosecond pulsed squeezed state carrying OAM.

2. Principle

LG beam is a typical vortex beam carrying OAM, whose electric field distribution near the beam waist is expressed as [34–36]

$$E_v = E_1 \exp\left(-\frac{\rho^2}{\omega_0^2}\right) \exp(il\theta), \tag{1}$$

where $\rho = \sqrt{x^2 + y^2}$ is the radial coordinate, ω_0 is the beam waist radius, l is the topological charge, and $\theta = \arctan(y/x)$ is the azimuthal angle. The phase term $\exp(il\theta)$ indicates that the phase varies with the azimuthal angle. After one full rotation around the beam center, the phase changes by $2\pi l$, forming a helical wavefront along the propagation direction. A phase singularity exists at the beam center, resulting in a characteristic dark core due to destructive interference [37]. With increasing topological charge l, the central dark core gradually expands, and the beam develops a more pronounced annular intensity profile. At the same time, the ring spacing becomes narrower, and the intensity along the rings is correspondingly enhanced.

The topological charge of the vortex beam can be determined by interfering it with a spherical reference wave, which is expressed as

$$E_s = E_2 \exp\left(-\frac{\rho^2}{\omega_0^2}\right) \exp(-ikx), \tag{2}$$

where k is the wavenumber. The resulting interference intensity is given by

$$\begin{aligned} I_s(x, y) &= |E_v + E_s|^2 \\ &= E_1^2 + E_2^2 + 2E_1E_2 \cos(l\theta + k\rho) \exp\left[-\frac{2(x^2 + y^2)}{\omega_0^2}\right]. \end{aligned} \tag{3}$$

The interference pattern exhibits characteristic spiral fringes, which can be used to accurately determine both the magnitude and the sign of the vortex beam's topological charge.

3. Experimental setup

To generate a bright pulsed squeezed light, a picosecond laser with a pulse duration of 2 ps, a repetition rate of 80 MHz at 1031.3 nm is employed. As shown in Fig. 1, the laser beam passes through a Faraday isolator and is split into two parts by a combination of half-wave plate and polarizing beam splitter (PBS1). The reflected laser beam is focused into a 2-mm custom-poled potassium titanyl phosphate (CPKTP) crystal for second-harmonic generation (SHG), producing

OPTICS CONTINUUM

a 515 nm pump wave for the OPA process [38]. The transmaitted laser beam passes through a delay line (Delay1) for precise optical-path adjustment, ensuring temporal overlap with the pump at a dichroic mirror (Semrock NFD01-75-1040). To ensure good spatial overlap, the beam size ratio between the seed beam and the pump beam is set to $1/\sqrt{2}$. The two beams are then coupled into the OPA stage to prepare bright squeezed light. To satisfy the phase-matching conditions and achieve maximum nonlinear conversion efficiency, both the OPA and SHG crystals are temperature-controlled precisely. After the squeezed light is prepared in the OPA, an optical filter (Semrock, FF01-1001) is used to block the residual pump light. The vortex beams can be generated through various methods, such as spiral phase plates, q-plates, and SLM [27,39–45]. In this work, a reflective phase-only SLM (Hamamatsu X15213-12) is employed to generate LG. By designing the phase pattern loaded onto the SLM, LG modes with the desired topological charge can be obtained. The prepared squeezed state is directed onto the SLM at a small angle of about 6° to ensure high modulation efficiency. The topological charge of the picosecond pulsed bright squeezed light is characterized through interference with a spherical wave. The interference pattern is recorded and analyzed using a beam profiler (CinCam CMOS-1203 IR). To characterize the quantum noise of the picosecond pulsed squeezed state carrying OAM, a resonant intensity detector is employed. A flip beam splitter is inserted to flexibly switch between the two detection paths.

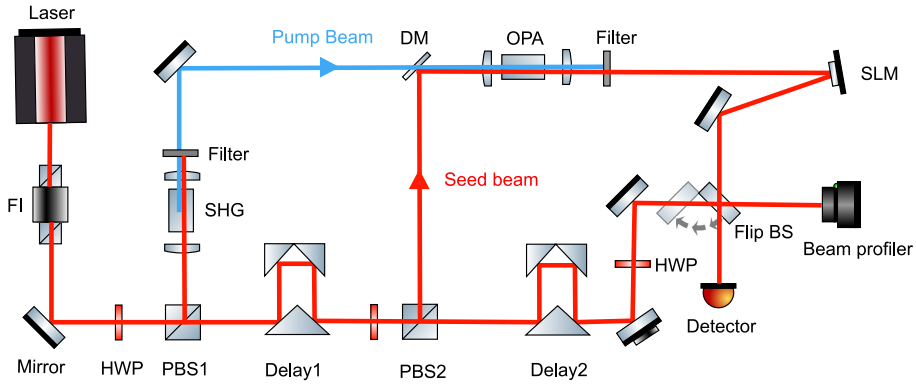

Fig. 1. Experimental setup. By flipping the beam splitter (BS), the squeezing level and the topological charge of the picosecond pulsed squeezed state carrying OAM is measured by the detector and beam profiler, respectively. FI, Faraday isolator; HWP, half wave plate; PBS, polarization beam splitter; DM, dichroic mirror.

The bright squeezed state is prepared by injecting the pump and seed beams into the OPA stage. In our experiment, the pump beam power is fixed at 10 mW. With an injected seed beam power of 5 mW, an amplitude-squeezed picosecond pulsed with an output power of 3 mW is generated. The squeezing level of the bright pulsed squeezed state is measured using a resonant intensity detector [25].

4. Experimental results and discussions

Figure 2 shows the squeezing level of the bright pulsed squeezed light at 20 MHz in the fundamental Gaussian mode (topological charge $l = 0$) . The red shadow shows the noise power of the 3 mW bright pulsed squeezed light, and the blue shadow corresponds to the reference noise obtained with an equal-power laser beam, which defines the SNL. A noise reduction of 1.42 dB below the SNL is observed.

The first row of Fig. 3 presents the intensity profiles of LG vortex beams with topological charge $l = 1, 5, 10, 20$. With the increase of l, the beams preserve a central dark core, while the

OPTICS CONTINUUM

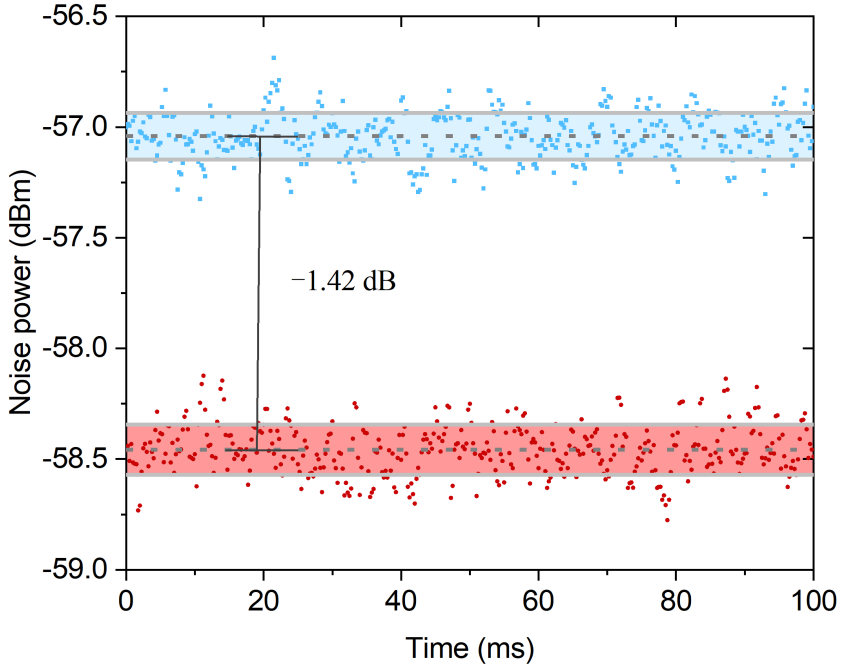

Fig. 2. Squeezed state in the fundamental Gaussian mode with an output power of 3 mW. The measurement parameters of the spectrum analyzer are as follows: resolution bandwidth (RBW), 300 kHz; video bandwidth (VBW), 100 Hz; analysis frequency, 20 MHz.

diameter of the bright outer ring expands, consistent with the features of LG vortex beams. The interference patterns between picosecond pulsed squeezed state carrying OAM and the reference spherical wave are shown in the second row of Fig. 3. The number of spiral arms corresponds to the topological charge of the beam, which are in good agreement with the theoretical simulations based on Eq. (3).

Figure 4 shows the measured squeezing level of LG beams. We achieve noise reduction of 1.42 dB, 1.38 dB, 1.33 dB, 1.31 dB, and 1.22 dB for OAM orders 0, 1, 5, 10, and 20, respectively, demonstrating that significant squeezing can be maintained even at topological charge $l = 20$.

With the increase of the OAM order, a squeezing level of picosecond pulsed squeezed state does not change too much. A small decreasing reduction can be attributed to the imperfect diffraction efficiency of the SLM. Furthermore, higher-order OAM beams ($|l|>0$) exhibit larger beam diameters, leading to a stronger impact of aperture clipping in the optical system. The measured losses for OAM orders 1, 5, 10, and 20 are 1.9%, 3.0%, 5.0%, and 9.1%, respectively.

5. Conclusion

In summary, we experimentally prepare the bright picosecond pulsed squeezed light with LG modes carrying topological charges up to 20. By interfering with a spherical wave, the topological structure is confirmed by observing l spiral fringes. As the topological charge increases from $l = 0$ to $l = 20$, the measured squeezing level decreases only slightly from 1.4 dB to 1.2 dB. This minor reduction indicates that the squeezing is largely insensitive to the OAM order. Besides LG modes, our scheme can be extended to prepare picosecond pulsed squeezed state with arbitrary spatial modes. The ability to produce high-order, bright pulsed squeezed light carrying OAM

OPTICS CONTINUUM

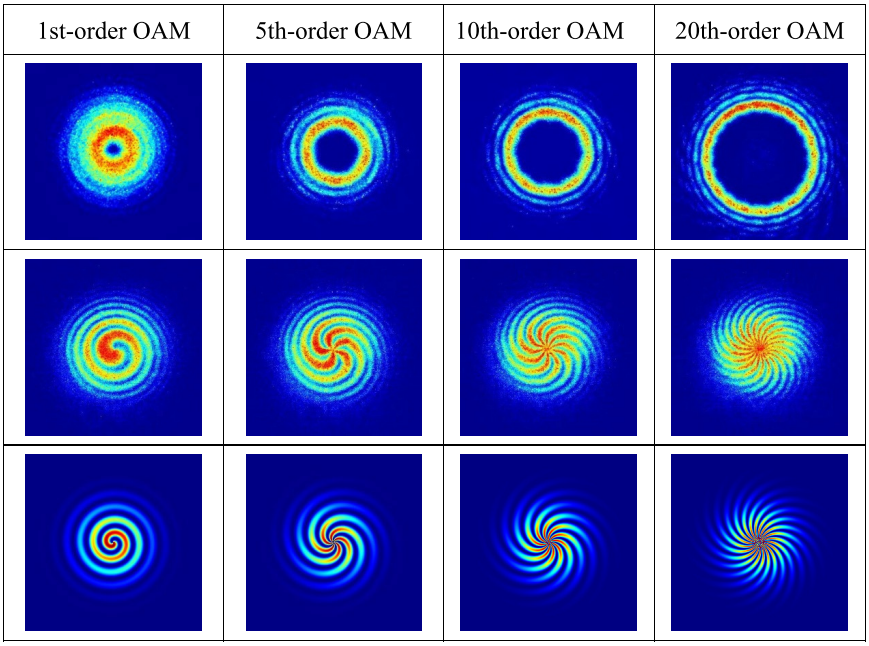

Fig. 3. Intensity distribution and interferograms of the LG bright pulsed squeezed light with topological charges $l = 1, 5, 10, 20$. The first row shows the intensity profiles of the vortex beams, while the second and third rows present the interference patterns with a spherical wave, experimentally and theoretically, respectively.

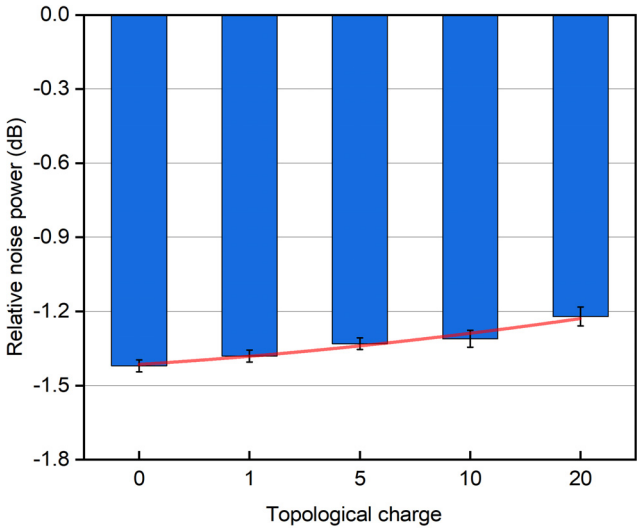

Fig. 4. Relative noise power of bright squeezed light as a function of the topological charge. The blue bars represent the measured squeezing levels with error bars, while the red line indicates the corresponding trend.

opens opportunities for precision angular-rotation metrology and high-dimensional quantum information processing.

OPTICS CONTINUUM

Funding. National Key Scientific Instrument and Equipment Development Projects (2022YFF0706002); National Natural Science Foundation of China (U25A20525); Fund for Shanxi "1331 Project" Key Subjects Construction.

Disclosures. The authors declare no conflicts of interest.

Data availability. Data underlying the results presented in this paper are not publicly available at this time but may be obtained from the authors upon reasonable request.

References

1. A. Furusawa, J. L. Sørensen, S. L. Braunstein, *et al.*, "Unconditional quantum teleportation," Science **282**(5389), 706–709 (1998).
2. L. S. Madsen, V. C. Usenko, M. Lassen, *et al.*, "Continuous variable quantum key distribution with modulated entangled states," Nat. Commun. **3**(1), 1083 (2012).
3. X. Zhang, Y. Zhang, Z. Li, *et al.*, "1.2-GHz balanced homodyne detector for continuous-variable quantum information technology," IEEE Photonics J. **10**(5), 1–10 (2018).
4. X. W. Deng, S. H. Hao, C. X. Tian, *et al.*, "Disappearance and revival of squeezing in quantum communication with squeezed state over a noisy channel," Appl. Phys. Lett. **108**(8), 081102 (2016).
5. B. Lu, L. Liu, J.-Y. Song, *et al.*, "Recent progress on coherent computation based on quantum squeezing," AAPPS Bull. **33**(1), 7 (2023).
6. S. Hao, X. Deng, Y. Liu, *et al.*, "Quantum computation and error correction based on continuous variable cluster states," Chin. Phys. B **30**(6), 060312 (2021).
7. X. Zhu, S. Ren, Y. Cao, *et al.*, "Integrated continuous-variable quantum light sources for quantum computing," Adv. Photonics **7**(06), 064005 (2025).
8. P. M. Anisimov, G. M. Raterman, A. Chiruvelli, *et al.*, "Quantum metrology with two-mode squeezed vacuum: parity detection beats the Heisenberg limit," Phys. Rev. Lett. **104**(10), 103602 (2010).
9. V. Giovannetti, S. Lloyd, and L. Maccone, "Advances in quantum metrology," Nat. Photonics. **5**(4), 222–229 (2011).
10. L. Pezzè, A. Smerzi, M. K. Oberthaler, *et al.*, "Quantum metrology with nonclassical states of atomic ensembles," Rev. Mod. Phys. **90**(3), 035005 (2018).
11. Y. Li, X. Cheng, L. Wang, *et al.*, "Multi-parameter quantum metrology with stabilized multi-mode squeezed state," arXiv (2023).
12. D. F. Walls, "Squeezed states of light," Nature **306**(5939), 141–146 (1983).
13. Z. Qin, M. Wang, R. Ma, *et al.*, "Progress of the squeezed states of light and their applications," Laser Optoelectron. Prog. **59**(11), 1–15 (2022).
14. U. L. Andersen, T. Gehring, C. Marquardt, *et al.*, "30 years of squeezed light generation," Phys. Scr. **91**(5), 053001 (2016).
15. Z. Y. Ou, S. F. Pereira, H. J. Kimble, *et al.*, "Realization of the Einstein-Podolsky-Rosen paradox for continuous variables," Phys. Rev. Lett. **68**(25), 3663–3666 (1992).
16. T. Yuishi, Y. Mitsuyoshi, Y. Hidehiro, *et al.*, "9 dB Quadrature squeezing at 860 nm with periodically-poled KTiOPO4," in *2007 Quantum Electronics and Laser Science Conference*, (IEEE, 2007), pp. 1–2.
17. H. Vahlbruch, M. Mehmet, S. Chelkowski, *et al.*, "Observation of squeezed light with 10-dB quantum-noise reduction," Phys. Rev. Lett. **100**(3), 033602 (2008).
18. H. Vahlbruch, M. Mehmet, K. Danzmann, *et al.*, "Detection of 15 dB squeezed states of light and their application for the absolute calibration of photoelectric quantum efficiency," Phys. Rev. Lett. **117**(11), 110801 (2016).
19. M. Wang, M. Zhang, Z. Qin, *et al.*, "Experimental preparation and manipulation of squeezed cat states via an all-optical in-line squeezer," Laser Photonics Rev. **16**(12), 2200235 (2022).
20. R. E. Slusher, P. Grangier, A. LaPorta, *et al.*, "Pulsed squeezed light," Phys. Rev. Lett. **59**(22), 2566–2569 (1987).
21. Y. Eto, Y. Zhang, and T. Hirano, "Transporting continuous quantum variables of individual light pulses," Opt. Express **19**(2), 1360 (2011).
22. Y. Eto, T. Tajima, Y. Zhang, *et al.*, "Observation of quadrature squeezing in a χ nonlinear waveguide using a temporally shaped local oscillator pulse," Opt. Express **16**(15), 10650–10657 (2008).
23. G. S. Atkinson, E. J. Allen, G. Ferranti, *et al.*, "Quantum enhanced precision estimation of transmission with bright squeezed light," Phys. Rev. Appl. **16**(4), 044031 (2021).
24. C. W. Freudiger, W. Min, B. G. Saar, *et al.*, "Label-free biomedical imaging with high sensitivity by stimulated Raman scattering microscopy," Science **322**(5909), 1857–1861 (2008).
25. C. A. Casacio, L. S. Madsen, A. Terrasson, *et al.*, "Quantum-enhanced nonlinear microscopy," Nature **594**(7862), 201–206 (2021).
26. S. Chen, J. Chen, T. Xia, *et al.*, "Optical vortices in communication systems: mode (de)modulation, processing, and transmission," Adv. Photonics **7**(04), 044001 (2025).
27. M. Semmler, S. Berg-Johansen, V. Chille, *et al.*, "Single-mode squeezing in arbitrary spatial modes," Opt. Express **24**(7), 7633 (2016).
28. L. Ma and M. Yan, "Generation of higher-order orbital angular momentum squeezed light," Optik **251**, 168357 (2022).
29. C. Qiao, F. Xu, M. Wang, *et al.*, "Experimental preparation of optical cat states carrying orbital angular momentum," Laser Photonics Rev. **18**(12), 2400235 (2024).

OPTICS CONTINUUM

30. D. Cozzolino, B. D. Lio, D. Bacco, *et al.*, "High-dimensional quantum communication: benefits, progress, and future challenges," Adv. Quantum Technol. **2**(12), 1900038 (2019).
31. A. E. Willner, K. Pang, H. Song, *et al.*, "Orbital angular momentum of light for communications," Appl. Phys. Rev. **8**(4), 041312 (2021).
32. Z. Li, X. Guo, H. Sun, *et al.*, "Manipulation of continuous variable orbital angular momentum squeezing and entanglement by pump shaping," Opt. Express **31**(3), 3651 (2023).
33. S. Liu, Y. Lou, and J. Jing, "Orbital angular momentum multiplexed deterministic all-optical quantum teleportation," Nat. Commun. **11**(1), 3875 (2020).
34. A. E. Siegman, *Lasers* (Univ. Science Books, Mill Valley, CA, 1986).
35. T. Wang, H. Wang, Y. Lai, *et al.*, "Orbital angular momentum detection of vortex beams by #-type lines," Sci. Rep. **15**(1), 11213 (2025).
36. Y. Shen, X. Wang, Z. Xie, *et al.*, "Optical vortices 30 years on: OAM manipulation from topological charge to multiple singularities," Light: Sci. Appl. **8**(1), 90 (2019).
37. K. Kitamura, M. Kitazawa, and S. Noda, "Generation of optical vortex beam by surface-processed photonic-crystal surface-emitting lasers," Opt. Express **27**(2), 1045 (2019).
38. Y. Zhang, J. Liu, Z. Qin, *et al.*, "Double-pass second-harmonic generation of picosecond pulses with custom-poled KTP crystal," Opt. Continuum **3**(3), 461 (2024).
39. K. Sueda, G. Miyaji, N. Miyanaga, *et al.*, "Laguerre-Gaussian beam generated with a multilevel spiral phase plate for high intensity laser pulses," Opt. Express **12**(15), 3548 (2004).
40. G. A. Turnbull, D. A. Robertson, G. M. Smith, *et al.*, "The generation of free-space Laguerre-Gaussian modes at millimetre-wave frequencies by use of a spiral phaseplate," Opt. Commun. **127**(4-6), 183–188 (1996).
41. G. Ruffato, M. Massari, and F. Romanato, "Generation of high-order Laguerre–Gaussian modes by means of spiral phase plates," Opt. Lett. **39**(17), 5094 (2014).
42. L. Marrucci, C. Manzo, and D. Paparo, "Optical spin-to-orbital angular momentum conversion in inhomogeneous anisotropic media," Phys. Rev. Lett. **96**(16), 163905 (2006).
43. E. Karimi, B. Piccirillo, L. Marrucci, *et al.*, "Light propagation in a birefringent plate with topological charge," Opt. Lett. **34**(8), 1225 (2009).
44. Y. Ohtake, T. Ando, N. Fukuchi, *et al.*, "Universal generation of higher-order multiringed Laguerre–Gaussian beams by using a spatial light modulator," Opt. Lett. **32**(11), 1411 (2007).
45. H. Wang, A. Hu, and P. Chen, "Generation of Laguerre-Gaussian beam based on spatial light modulator," Laser Technol. **41**(3), 447-450 (2017).